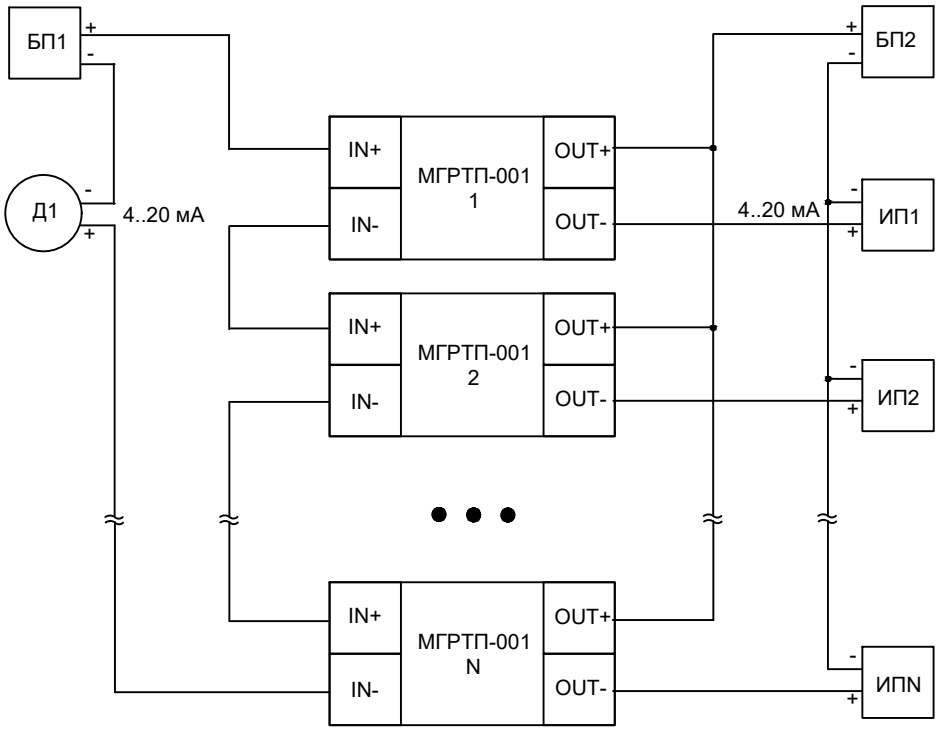
БП1
+
-
Д1
-
+
4..20 мА
IN+
IN-
МГРТП-001
1
OUT+
OUT-
IN+
IN-
МГРТП-001
2
OUT+
OUT-
IN+
IN-
МГРТП-001
N
OUT+
OUT-
4..20 мА
БП2
ИП1
ИП2
ИПN